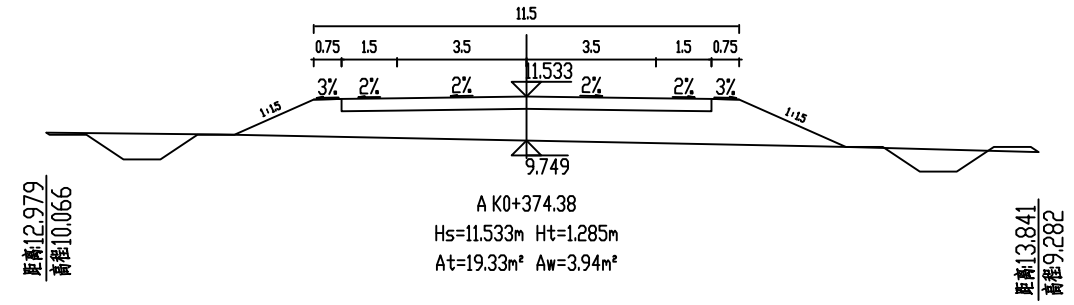

A K0+374.38
Hs=11.533m Ht=1.285m
At=19.33m² Aw=3.94m²

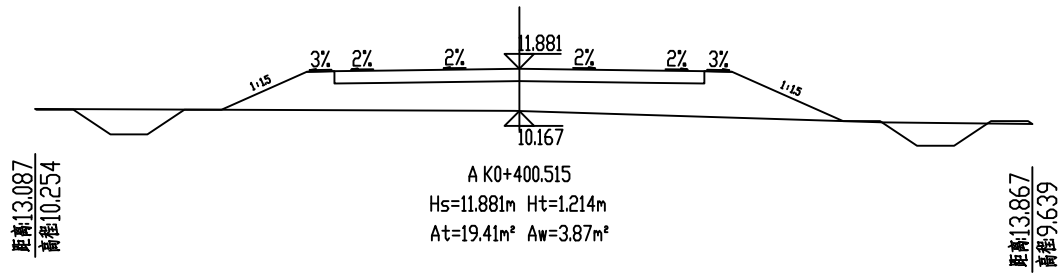

A K0+400.515
Hs=11.881m Ht=1.214m
At=19.41m² Aw=3.87m²

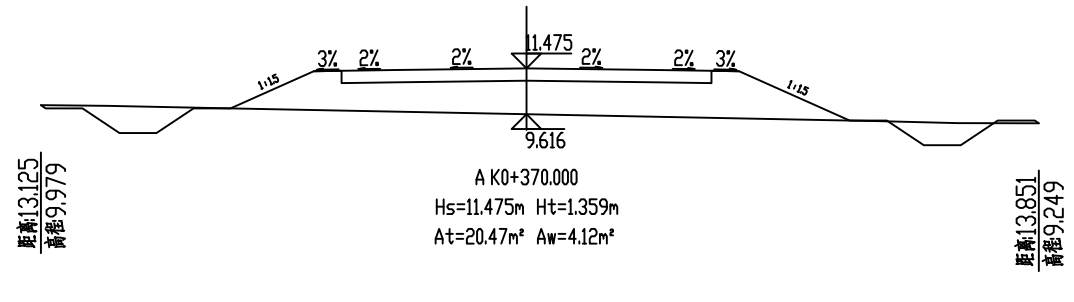

A K0+370.000
Hs=11.475m Ht=1.359m
At=20.47m² Aw=4.12m²

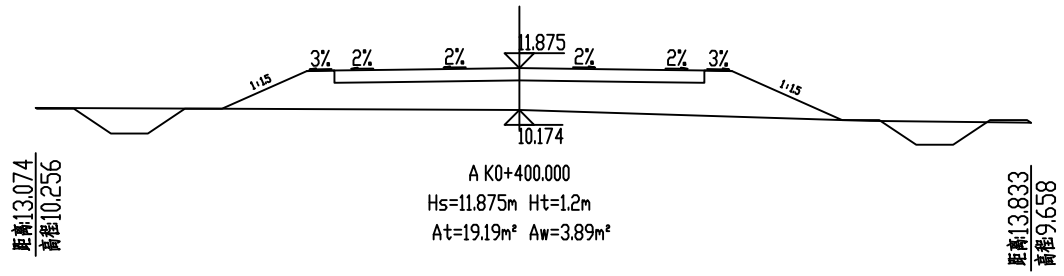

A K0+400.000
Hs=11.875m Ht=1.2m
At=19.19m² Aw=3.89m²

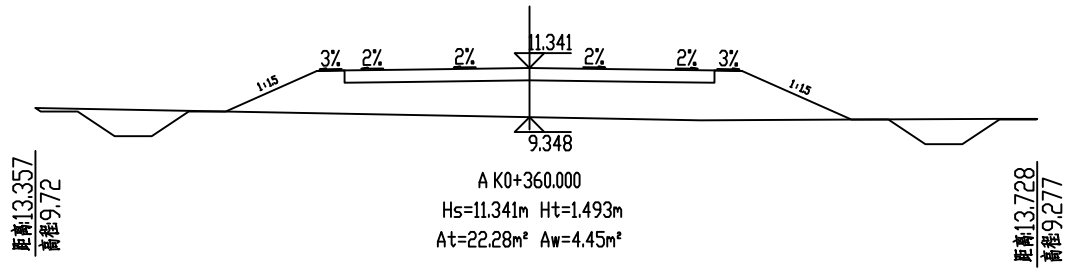

A K0+360.000
Hs=11.341m Ht=1.493m
At=22.28m² Aw=4.45m²

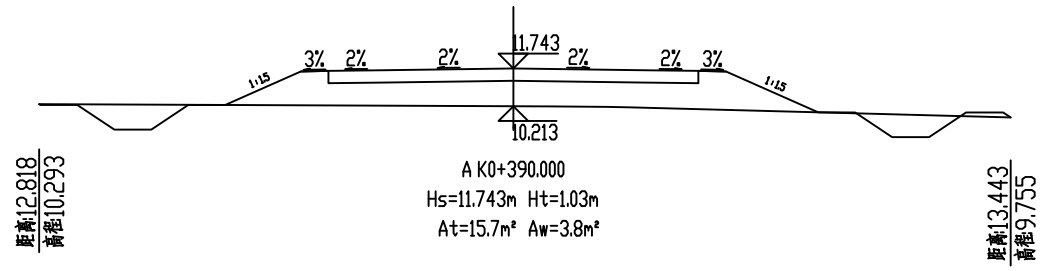

A K0+390.000
Hs=11.743m Ht=1.03m
At=15.7m² Aw=3.8m²

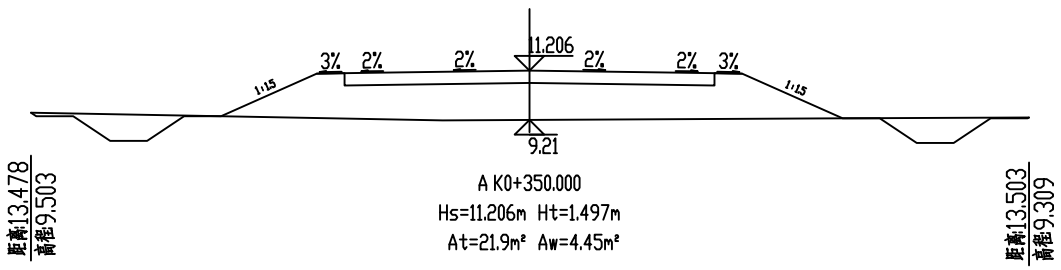

A K0+350.000
Hs=11.206m Ht=1.497m
At=21.9m² Aw=4.45m²

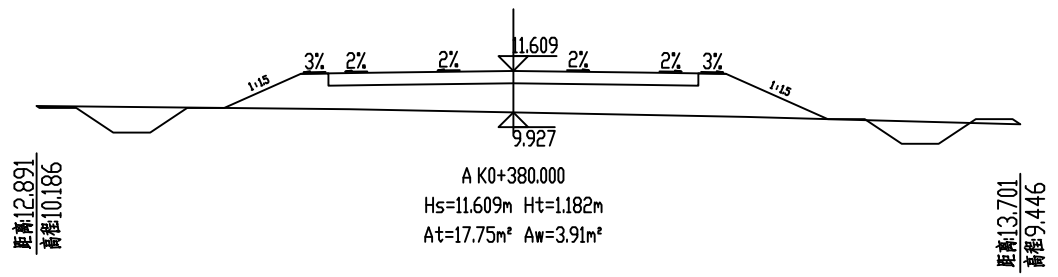

A K0+380.000
Hs=11.609m Ht=1.182m
At=17.75m² Aw=3.91m²